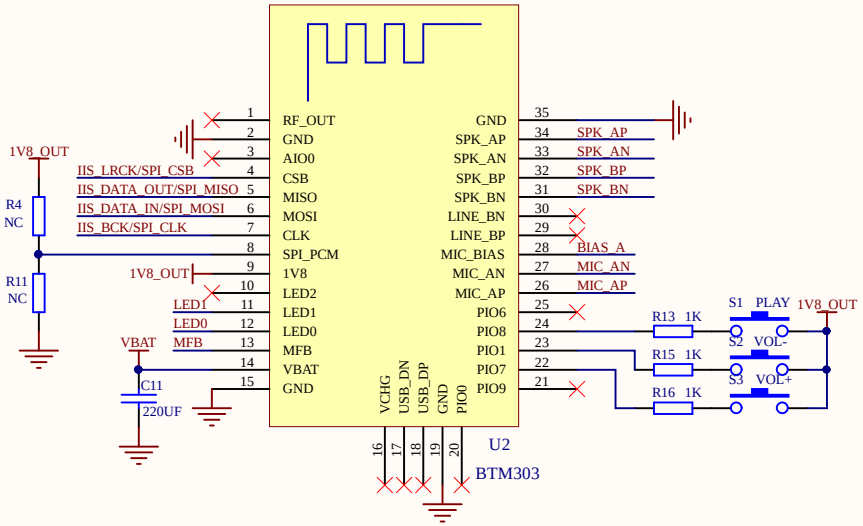

SPI_PCM=1:SPI_MODE
SPI_PCM=0:I2S_MODE

QCC3003 bluetooth module

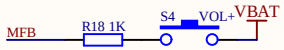

Button boot

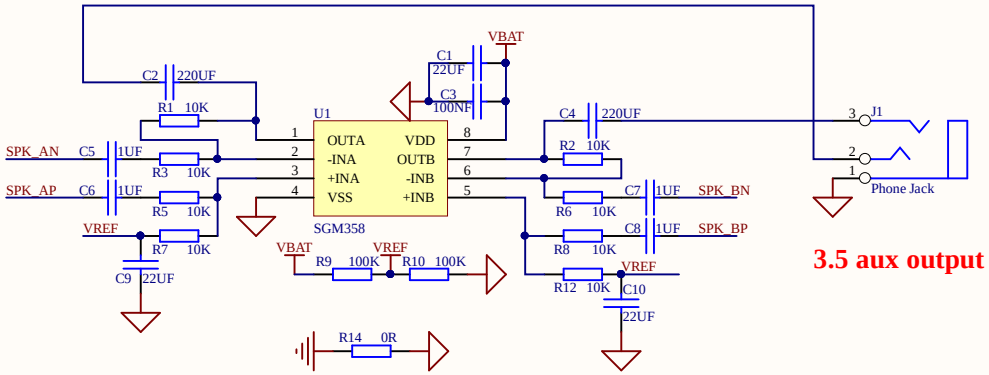

3.5 aux output

Differential to single-ended analog audio output

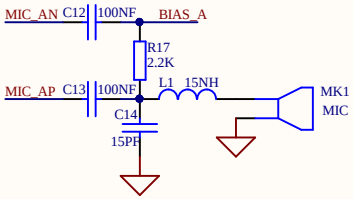

microphone input

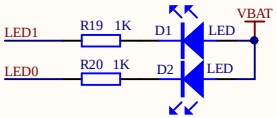

LED : led0 red， led1 blue

VBAT voltage： 3.3-4.2V

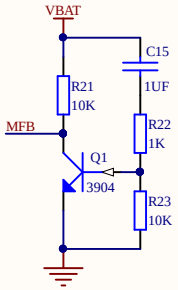

Power on boot

Add delay circuit when power on boot

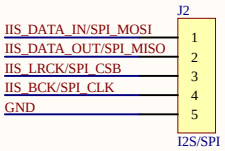

I2S Digital audio output

Title		
Size A4	Number	Revision
Date: 2020-04-13		Sheet of
File: E:\Bluetooth\..\BTM303.Sch		Drawn By: